EMITERSKO SLJEDILO na VF

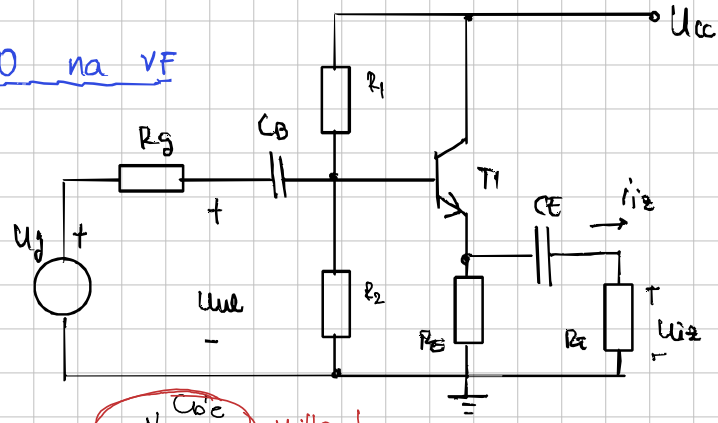

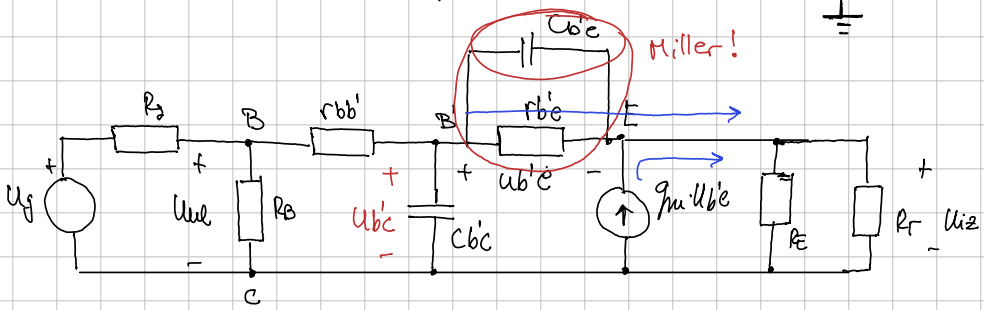

$$C_{ul} = C_{b'c} + C_{b'e}(1-K) \qquad C_{iz} = C_{b'e}\,\frac{K-1}{K}$$

$$R_{b'c} = \frac{r_{b'e}}{1-K} \qquad R_{ec} = r_{b'e}\,\frac{K}{K-1}$$

$$K = \frac{U_{iz}}{U_{b'e}} = \frac{\left(g_m \cdot U_{b'e} + \frac{U_{b'c}}{r_{b'e}}\right)(R_E \parallel R_T) \quad /\cdot r_{b'e}}{U_{b'e} + \left(g_m \cdot U_{b'e} + \frac{U_{b'c}}{r_{b'e}}\right)(R_E \parallel R_T) \quad /\cdot r_{b'e}} = \frac{(1+g_m \cdot r_{b'e})(R_E \parallel R_T)}{r_{b'e} + (1+g_m \cdot r_{b'e})(R_E \parallel R_T)}$$

$K < 1$, $K > 0$ (pozitivan), $K \approx 1$ (tipično 0.99)

$$\underline{C_{ul}} = C_{b'c} + \cancel{C_{b'e}\underbrace{(1-1)}_{0}} \approx C_{b'c}$$

$$R_{b'c} = \frac{r_{b'e}}{1-1} = \infty$$

$$\underline{C_{iz}} = C_{b'e}\,\frac{1-1}{1} = \emptyset$$

$$R_{ec} \approx \infty$$

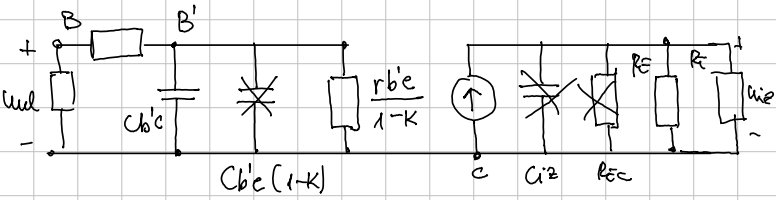

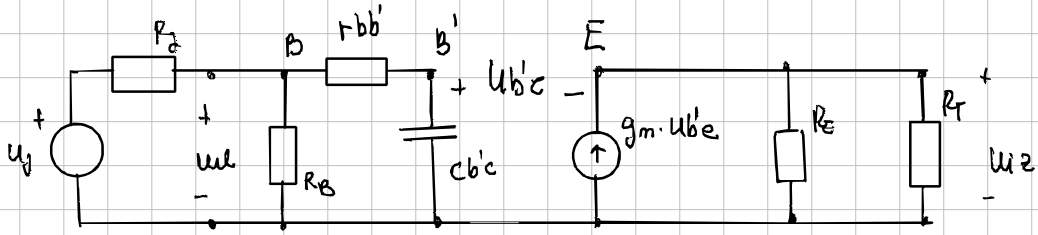

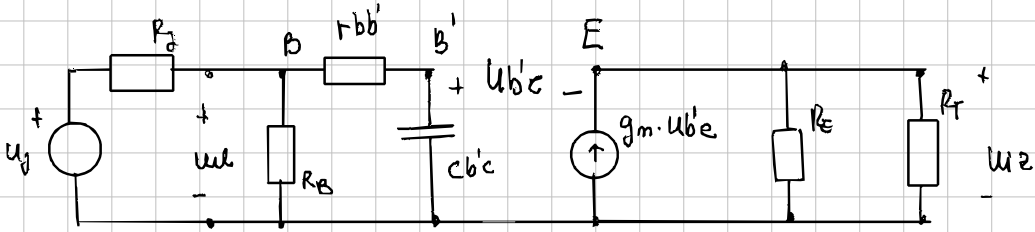

$$A_V(j\omega) = \frac{A_{V0}}{1 + j\frac{\omega}{\omega_{ul}}}$$

$$A_{V0} = \frac{u_{iz}}{u_{ul}} = \frac{g_m \cdot u_{b'e}\,(R_E \parallel R_T)}{u_{b'c} + g_m \cdot u_{b'e}\,(R_E \parallel R_T)}$$

$$A_{V0} = \frac{g_m\,(R_E \parallel R_T)}{1 + g_m\,(R_E \parallel R_T)}$$

$$\omega_{ul} = \frac{1}{\tau_{ul}} = \frac{1}{C_{b'c} \cdot r_{bb'}}$$

$$A_{Vg}(j\omega) = \frac{A_{Vg0}}{1 + j\frac{\omega}{\omega_{gul}}}, \quad A_{Vg0} = \frac{u_{iz}}{u_g} = \frac{u_{iz}}{u_{ul}} \cdot \frac{u_{ul}}{u_g} = A_{V0} \cdot \frac{R_B}{R_g + R_B} = A_{Vg}$$

$$\omega_{gul} = \frac{1}{C_{b'c}\,(r_{bb'} + R_g \parallel R_B)}$$

$$A_I(j\omega) = \frac{A_{I0}}{1 + j\frac{\omega}{\omega_{Iul}}} \Rightarrow A_{I0} = \frac{u_{iz}}{u_{ul}} \cdot \frac{R_B}{R_T} = A_{V0} \cdot \frac{R_B}{R_T} = A_{I0}$$

$$\omega_{Iul} = \frac{1}{C_{b'c}\,(r_{bb'} + R_B)}$$

---

uz kapacitiveu ograničenj

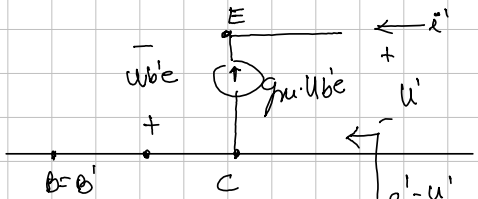

$$A_V = \frac{u_{iz}}{u_{ul}}$$
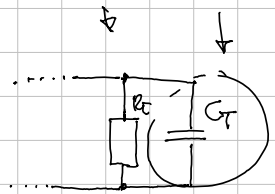
$$R' = \frac{u'}{i'} = \frac{-u_{b'e}}{-g_m \cdot u_{b'e}} = \frac{1}{g_m}$$